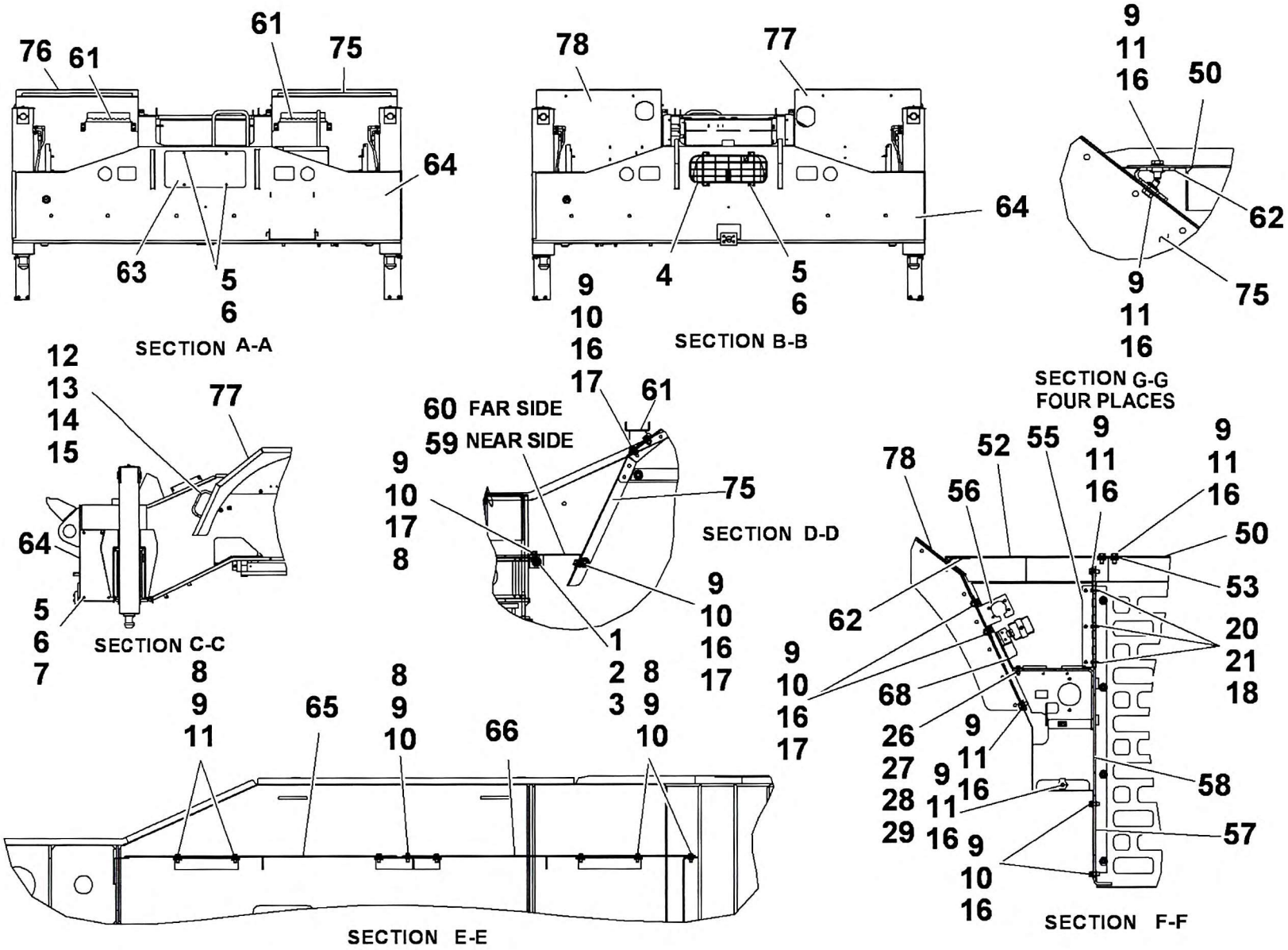

(SHEET 2 OF 2)

80029105

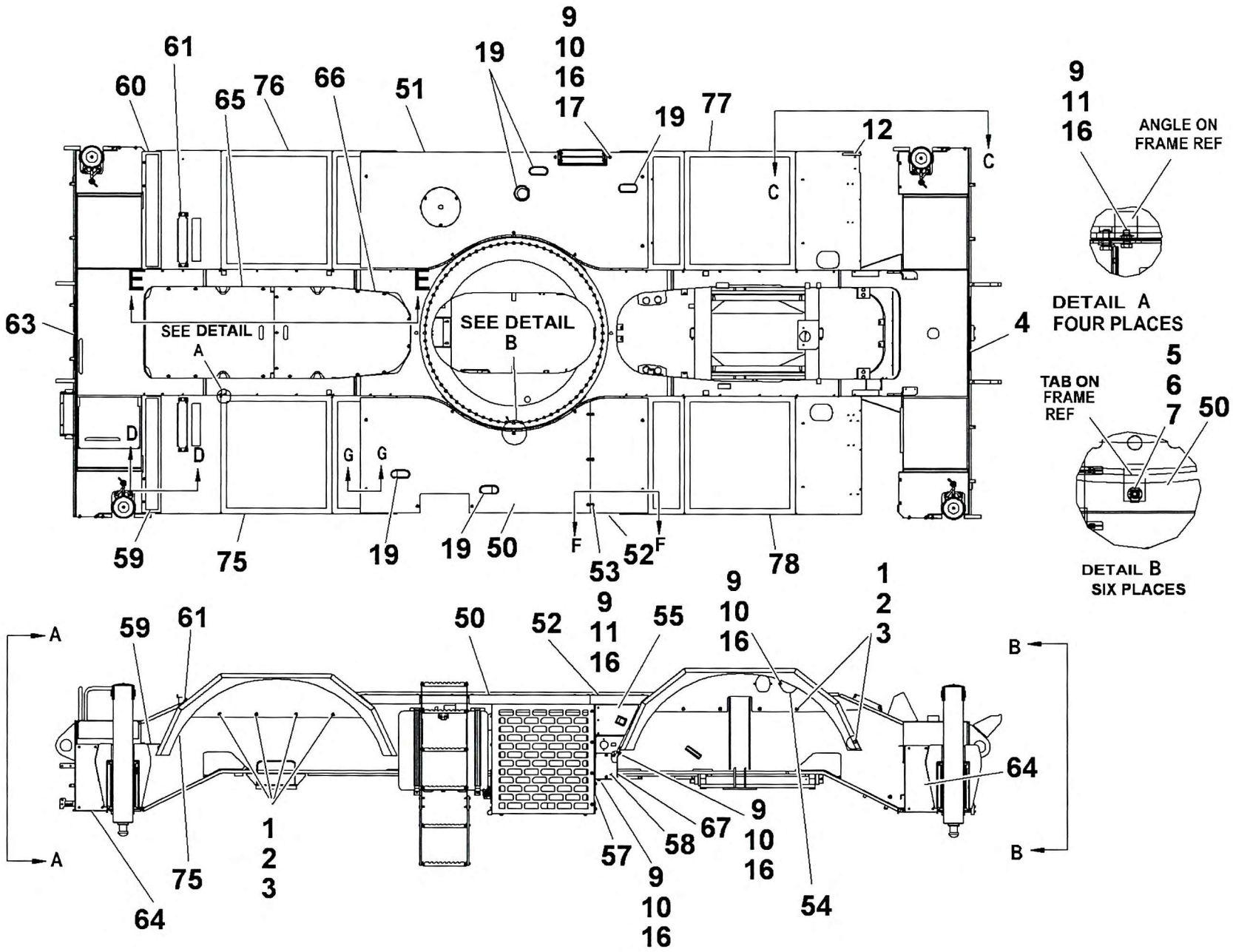
SEE DETAIL A
SEE DETAIL B
ANGLE ON FRAME REF
DETAIL A FOUR PLACES
TAB ON FRAME REF
DETAIL B SIX PLACES

(SHEET 1 OF 2)